TEKNOGRC

20 t

TK20

CRAWLER CRANE

20 t
MAX LOAD CAPACITY

20.5 m
MAX LIFTING HEIGHT

4 km/h
MAX SPEED

24 t
TOTAL WEIGHT

110 kW
ENGINE

The TK20, a 20-ton crawler telescopic crane, is a highly versatile machine designed to deliver high performance in any operating environment. Its compact size facilitates transport and allows easy maneuvering even in the tightest spaces. The crawler chassis ensures stability and traction on uneven or sloped terrain, while the telescopic boom provides precise and fast lifting.

TECHNICAL FEATURES - OPERATING SPEED - DIMENSIONS			
	Maximum load capacity	20	t
	Capacity	20	t
	Maximum lifting height	20.5	m
	Winch speed	67/154	m/min
	Lenght and diameter of winch ropes	L 160 Ø 13	m - mm
	Boom lifting speed	55	s
	Boom extension speed	80	s
	Upper structure rotation speed	2	r/min
	Maximum speed	4	km/h
	Maximum slope	87.8	%
	Emissions	EU 2016/1628	
	Total weight	24	t
	Total size	8,500 x 2,530 x 2,850	mm
	Boom lenght	18	m
	Boom tilt	-2 +80	°

DIMENSIONS

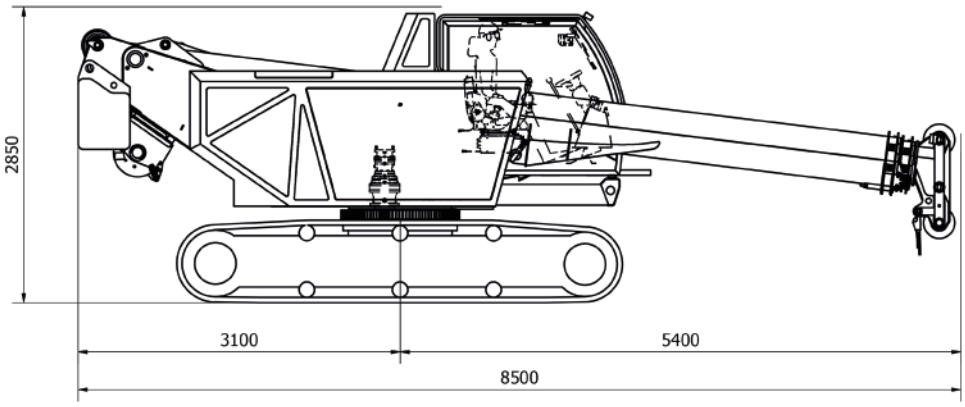

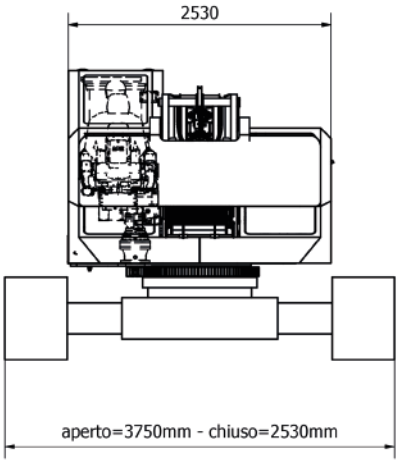

EQUIPMENT

UNDERCARRIAGE

Undercarriage	Tracked undercarriage with hydraulically widenable track. Track width of 600mm.
Travel	Hydraulic travel drive controlled by a Danfoss control unit. Two pumps and two closed-circuit motors allow it to reach 4 km/h. The machine is equipped with an anti-dumping filter to absorb the oscillations on the pedal and on the steering wheel during the work phase.
Electrical system	CAN Bus data transmission. 24 Volt direct current.

DRIVING

Driving	Ergonomic driving system with electronic foot controls (optional steering wheel available) Dual Path mode with active counter-rotation. Automatic/manual Park Brake management.
Operator's cab	Cab with great visibility, comfortable and equipped with sliding windows. Front and upper glass with wiper. Corrosion resistant paint. Wide visibility for different working conditions.
Comfort	Air conditioning, heating and air-suspension seat. Seat belts. Ample lighting in the operator's cab.

BOOM

Boom	Telescopic in high resistance steel. 1 base element, 2 synchronized extensions.
Boom lenght	18 m

LIFTING

Pick & Carry	13.4 tonnes at a 4-metre radius

UPPER STRUCTURE

Chassis	Anti-torsion welded structure, in high-strength steel.
Rotation	Continuous 360° using axial piston hydraulic motor. Planetary gearbox with internal toothed fifth wheel and double row of balls. Multiple disc negative brake.
Control	Hydraulically operated manipulators with the possibility of simultaneous proportional maneuvers.
Lifting winch	Variable displacement axial piston engine. Lifting drum with integrated planetary gearbox and parking brake with multiple discs. Block valve and descent control. Cable gland to improve the winding of the rope on the drum.
Hydraulic system	Open circuit system with axial piston hydraulic pumps. Proportional hydraulic distributors with load sensing power regulation. Possibility of performing multiple maneuvers simultaneously. Heat exchanger for oil cooling. Oil filtering through 1 cartridge filter on the return circuit.
Hydraulic oil tank	350 l
Electrical system	24 V power supply. CAN Bus vehicle management network. 2 batteries, each with 143Ah.
Safety devices	Electronic load limiter with indication of boom tilt, boom length, lifted load, maximum liftable load. Limit switches. Safety valves on all hydraulic functions.
Ballast	In a single piece with a weight of 5 tons.
Cameras	1 camera located on the rear side to increase visibility during more restricted maneuvers. 1 camera for supervising the winding of the rope on the winch.

ENGINE

Engine	Cummins F 3.8 Stage V- Tier 4f- 110 kW@2200rpm.
Diesel tank	225 l
Def tank	38 l

TABLE 01

OVER FULL RANGE (360°). Crawlers fully extended - Slope 0° - CWT 4400kg + 2000kg

RADIUS (m)	BOOM LENGHT				
	7,85	10,70	13,60	16,40	19,265
2	20.000				
3	16.300	13.300			
4	13.400	12.300	10.300		
5	9.800	9.100	8.500	8.000	
6		7.100	6.700	6.400	6.000
7		5.700	5.500	5.300	5.100
8		4.800	4.600	4.400	4.300
9			3.900	3.700	3.600
10			3.300	3.200	3.100
11			3.000	3.200	2.700
12				2.400	2.400
13				2.100	2.100
14				2.000	1.800
15					1.600
16					1.400
17					1.400
18					
19					
20					
21					
22					
23					
Reeving	10	6	6	4	4
1a	0%	25%	50%	75%	100%
2a	0%	25%	50%	75%	100%
3a	0%	25%	50%	75%	100%
4a	0%	25%	50%	75%	100%
	Maximum permissible wind speed v = 49 km/h				

OPTIONAL EXTRAS

- Auxiliary winch
- Jib: 1.5 m
- Jib: 6 m - foldable and adjustable from 0° to 20°
- Tilting cab
- Industry 4.0 kit
- Cameras / additional headlights kit
- Electric fuel pump
- Radio control for loading and unloading
- Custom paint finish
- Rubber track pads
- AI camera
- Rope containment kit
- Toolbox on undercarriage
- Steering wheel control for crawler travel
- Cab lifting system
- Lifting forks
- Blade kit for crawler undercarriage

All data, technical characteristics and information reported in this document are for informational purposes and are subject to change without any prior notice requirement. All specifications described do not constitute a guarantee since the performance of the machine varies depending on use.

Machine illustrations may contain optional and additional equipment. The dimensional data refers to average reference measurements indicated for informational purposes only.

The commissioning of the machine and its correct use require compliance with the use and maintenance manual. The weights of hooks, blocks and all lifting accessories are part of the load and must be deducted from the loads indicated.

Please contact TeknoGRC for more information regarding optional and additional equipment.

OUR RANGE

TK10

TK20

TK30

TK40

TK40 HD

TK60

TK45 LS

TK35 T

CG 2040

Do you need a custom crane? We make machinery on request specific to the customer's needs.
For more information, contact us at the e-mail address *info@teknogrc.it*

TEKNOGRC

TEKNO GRC s.r.l.

Via Vecchia Fornace, 31
24050 Bariano (BG)

+39 0363 958311
info@teknogrc.it

www.teknogrc.it